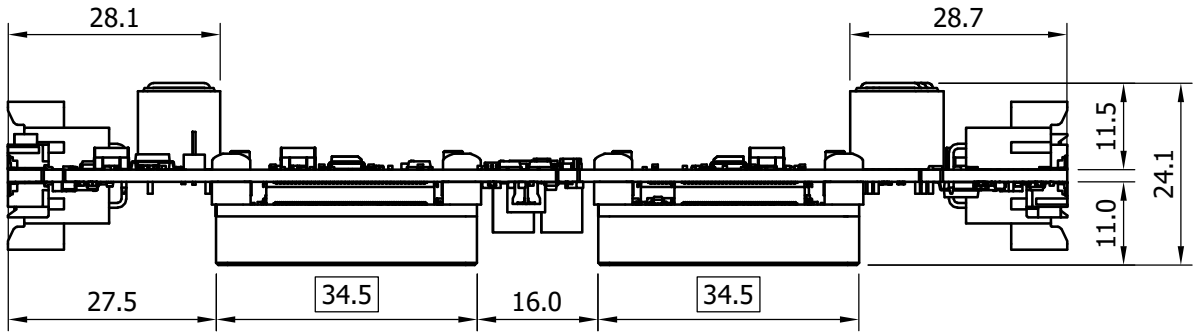

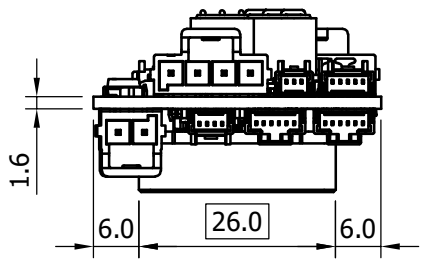

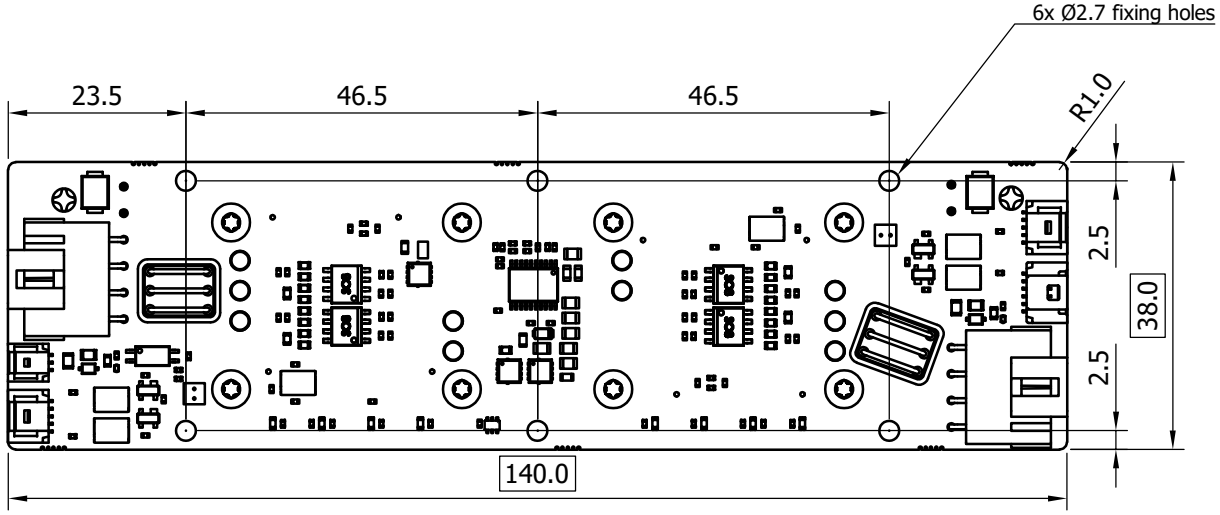

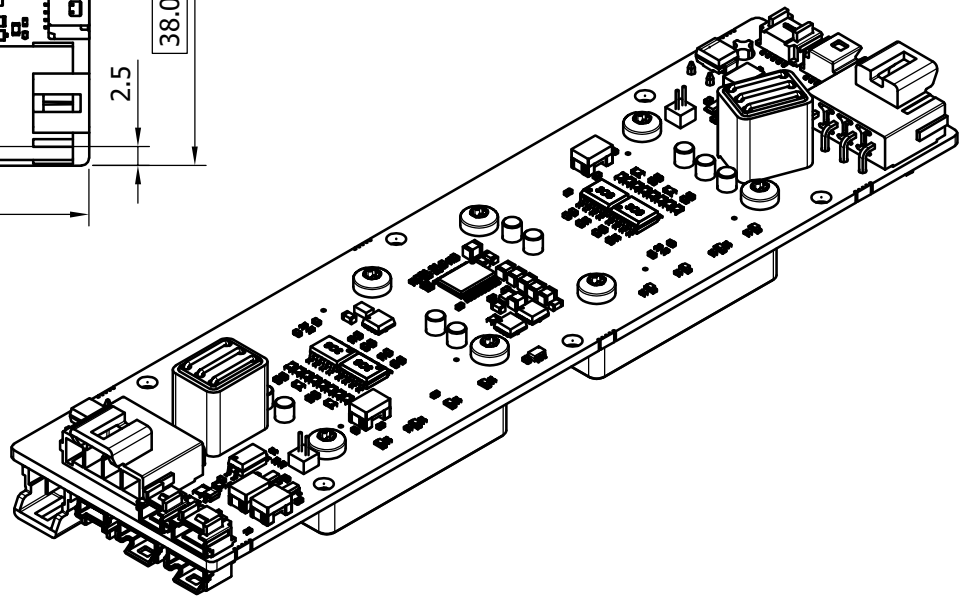

Project **Dual-axis carrier board for Robot Link**	Ref. i058A	Units All in mm	Web ingeniamc.com/summit-designer	
Title Board dimensions	Rev. 1.0.0	Tol. ±0.2 mm	Email hello@ingeniamc.com	Sheet no. 1/3
	Date 30/JAN/2023	Size A4 Scale 1:1		

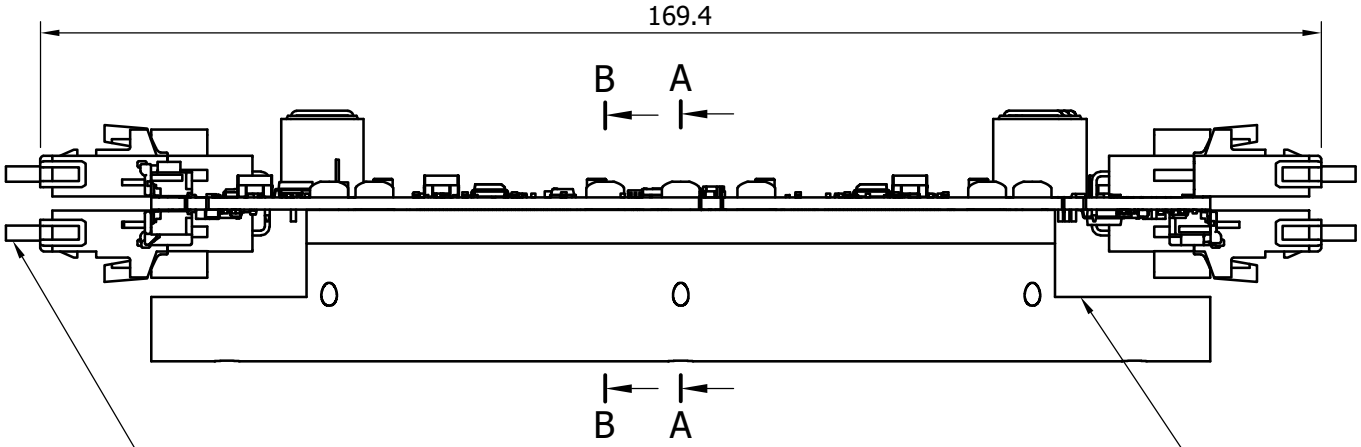

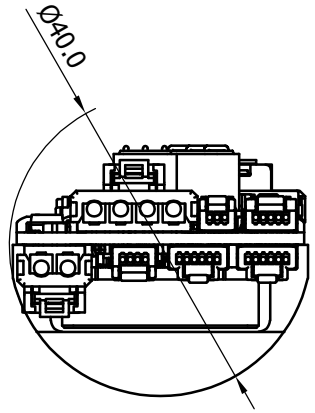

Additional clearance might be required for sufficient wire bending radius

Distance to board allows for proper function of the mating latching lock as well as a thin gap for thermal material

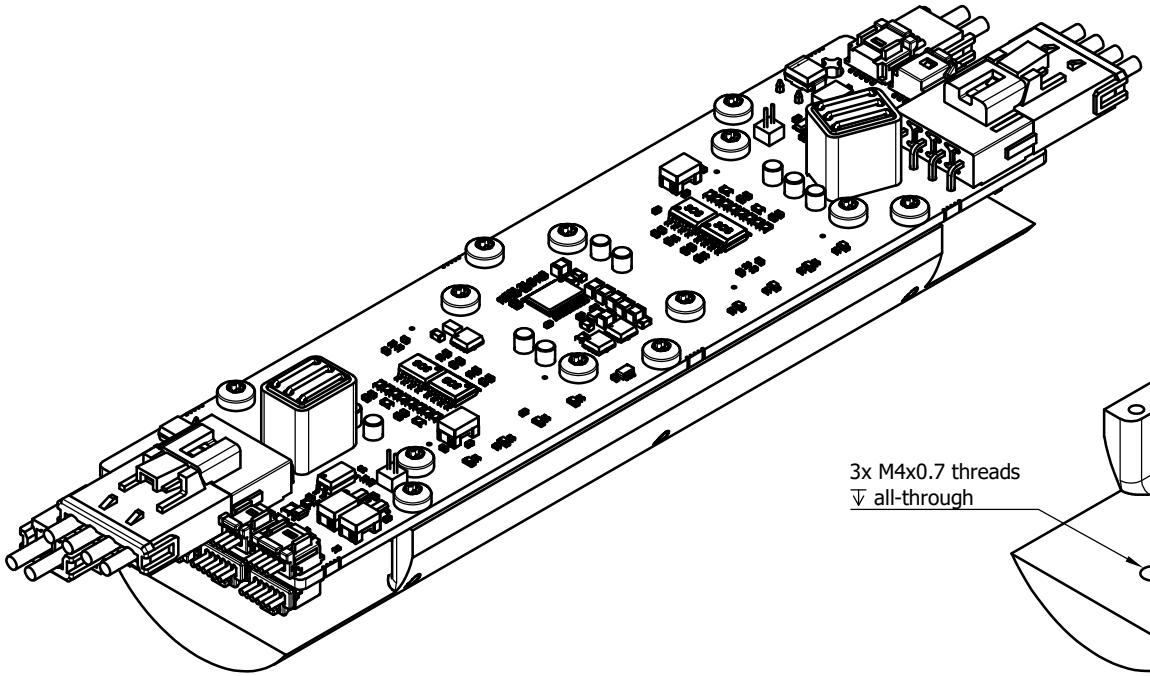

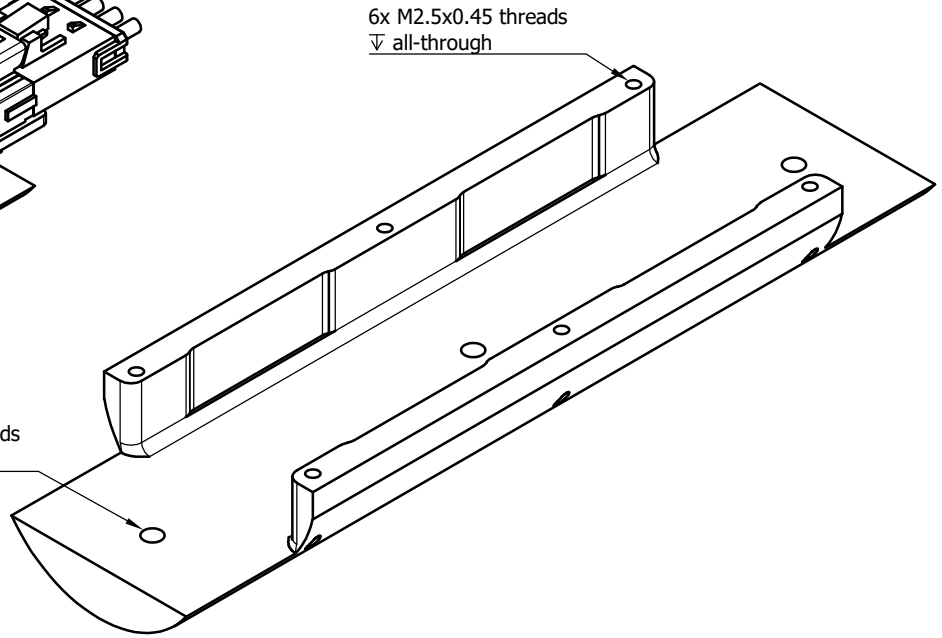

Project **Dual-axis carrier board for Robot Link**	Ref. i058A	Units All in mm		Web ingeniamc.com/summit-designer	
	Rev. 1.0.0	Tol. ±0.2 mm			
Title Mating connectors & proposed tube support	Date 30/JAN/2023	Size A4	Scale 1:1	Email hello@ingeniamc.com	Sheet no. 2/3

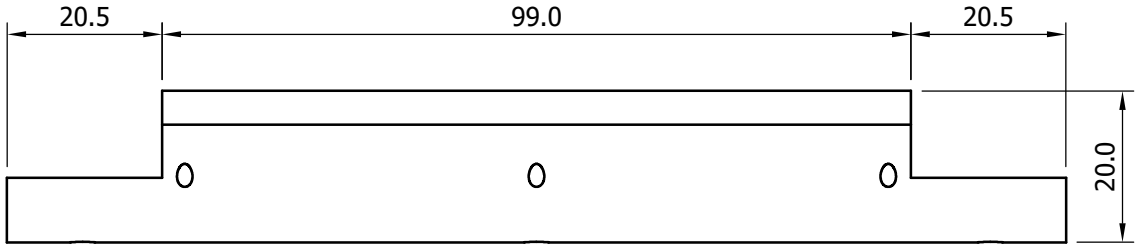

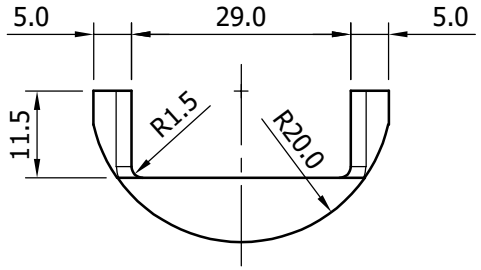

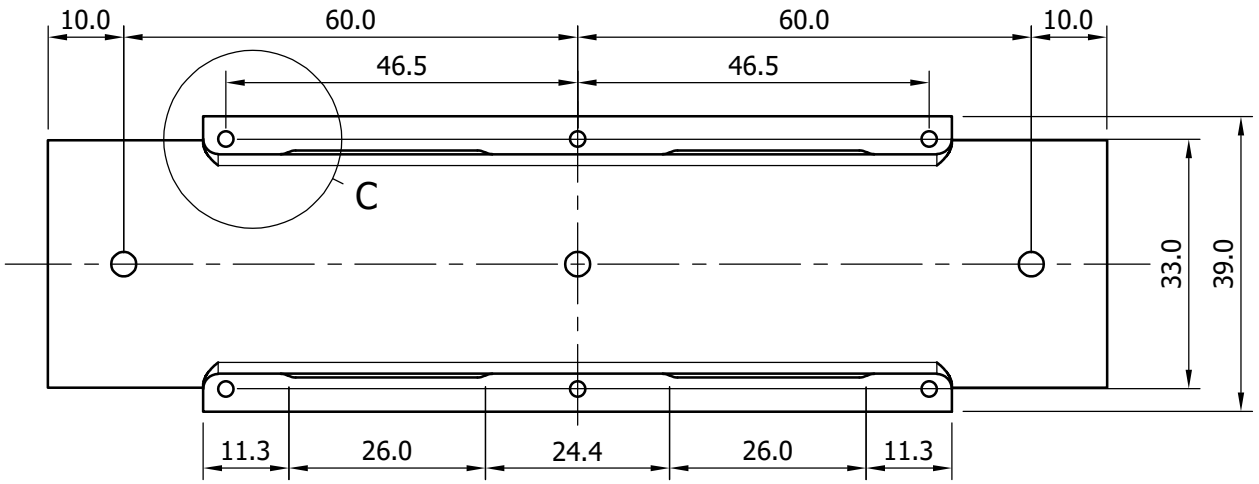

C (2:1)

Holding surface detail

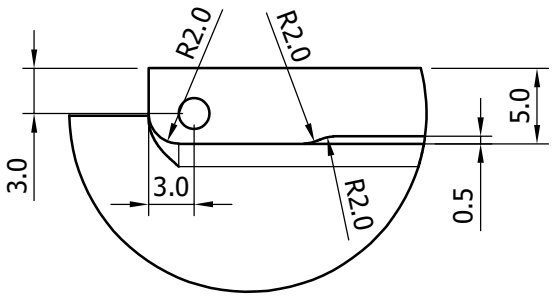

B-B (1:1)

Drive screw length

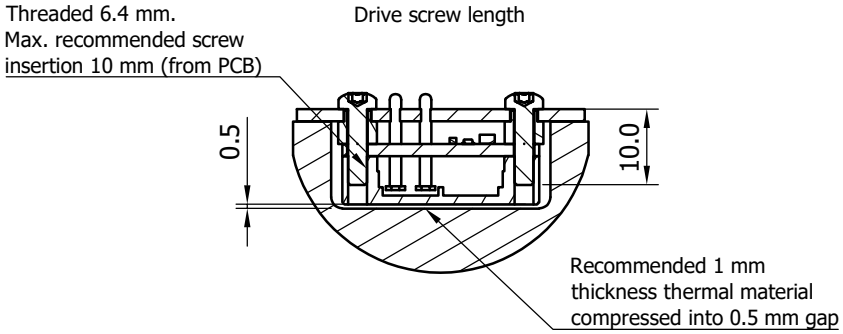

A-A (1:1)

Support screw length

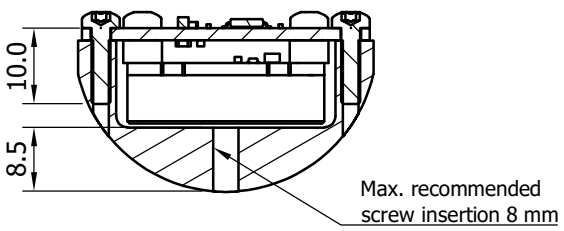

Project **Dual-axis carrier board for Robot Link**	Ref. i058A	Units All in mm	Web ingeniamc.com/summit-designer	
	Rev. 1.0.0	Tol. ±0.2 mm		
Title Proposed tube support specifications	Date 30/JAN/2023	Size A4 Scale 1:1	Email hello@ingeniamc.com	Sheet no. 3/3